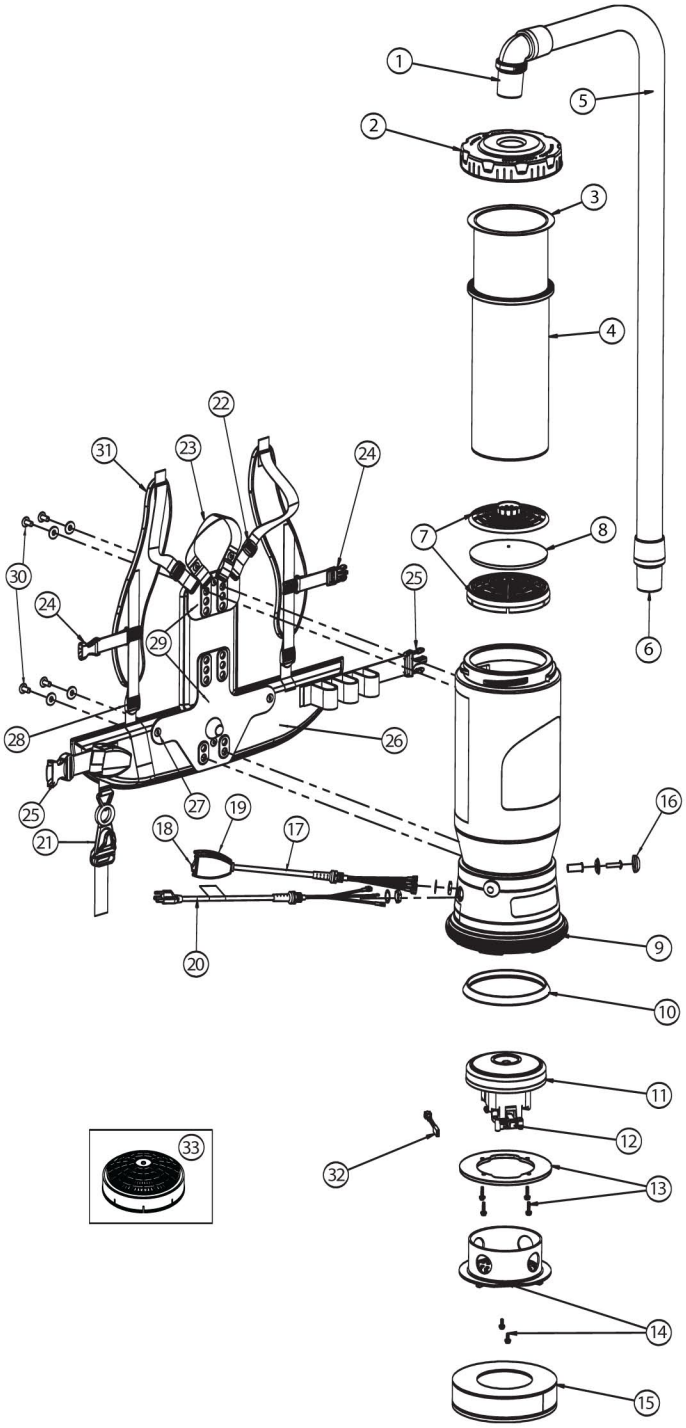

| | No. | Product Name | Qty |
|---|---|---|---|
| 1 | 101928 | Replacement Double Swivel Elbow Cuff (Black) 1 1/2" | 1 ea. |
| 2 | 106073 | Twist Cap (Purple) | 1 ea. |
| 3 | 100431 | 496 Sq. In. Intercept Micro Filter | 10/pk |
| 4 | 100564 | Micro Cloth Filter | 1 ea. |
| 5 | 103048 | Static-Dissipating Hose (Black) w/Cuffs 1 1/2" | 1 ea. |
| 6 | 100694 | Replacement Swivel Cuff (Black) 1 1/2" | 1 ea. |
| 7 | 100030 | Dome Filter w/Foam Media | 1 ea. |
| 8 | 100343 | Foam Filter Media for Dome Filter | 1 ea. |
| | 101220 | High Filtration Disk (optional) | 2/pk |
| 9 | 100586 | Bottom Bumper | 1 set |
| 10 | 100014 | Tetraseal | 1 ea. |
| 11 | 105162 | Motor/Fan (120 V) w/Crimps | 1 ea. |
| | 100379 | Motor Ground Wire Clamp Set w/Screws | 1 set |
| | 100380 | Motor Crimp Set: 4 Female, 4 Male, Ground Crimp Connector | 1 set |
| 12 | 105164 | Carbon Brush Set (Domel Motor) | 1 set |
| 13 | 100335 | Motor Compression Ring w/Screws | 1 set |
| | 100378 | Compression Ring Screws: 4 Screws | 1 set |
| 14 | 105044 | Motor Shroud Cover w/Screws: 2 Screws | 1 set |
| 15 | 105800 | Sound Muffler | 1 ea. |
| 16 | 100368 | Motor Mounting System Set: 3 Well Nuts, 3 Bolts, 3 Washers, 3 Covers | 1 set |
| 17 | 101714 | Switch Cord w/Crimps | 1 set |
| | 101610 | Switch Cord Assembly (includes: #17, 18, 19) | 1 ea. |
| 18 | 106066 | On/Off Switch (must use with #106287) | 1 ea. |
| | 106287 | Switch Box w/Velcro and Screws | 1 ea. |
| 19 | 101472 | Switch Box w/Velcro and New Lamb Switch | 1 set |
| 20 | 100641 | Power Cord (18" 14/3) Assembly | 1 set |
| 21 | 102604 | Schulte Cord Holder | 1 ea. |
| 22 | 100358 | Shoulder Strap Plastic Adjustment Buckle (Top) | 1 ea. |
| 23 | 101737 | Carry Handle w/Rivet and Washer Set | 1 set |
| 24 | 103627 | Sternum Strap Buckles (Latch and Keeper) | 1 set |
| 25 | 106719 | Waist Belt Keeper and Latch | 1 ea. |
| 26 | 100359 | Waist Belt (includes: #25) | 1 ea. |
| 27 | 100375 | Barrel Nut Connection Set for Backplate (Replacement) | 1 set |
| 28 | 100357 | Shoulder Strap Plastic Adjustment Buckle (Bottom) | 1 ea. |
| 29 | 105046 | Backplate Assembly (includes: #27) | 1 ea. |
| | 100354 | Strap Assembly Complete (includes: #26, 31) | 1 set |
| | 103166 | Backplate System Complete (includes: #26, 29, 30, 31) | 1 set |
| 30 | 100716 | Backplate (Black) Connection Set: 4 Screws w/Washers | 1 set |
| 31 | 100356 | Shoulder Strap Assembly (includes: #22, 24, 28) | 1 set |
| 32 | 103476 | Thermal Protector | 1 ea. |
| 33 | 106526 | Replacement HEPA Dome Filter | 1 ea. |
| | 101678 | 50' Extension Cord (Not Shown) | 1 ea. |