Model # HLSC05G26

26 Gallon/98 Liter Stainless Steel

ROUND OPEN TOP TRASH CAN

HLS Commercial 26 Gallon Stainless Steel Round Trash Can is the perfect waste receptacle for high-traffic areas like restroom, lobbies, hallways, and conference rooms. This 26 Gallon / 98 Liter receptacle features an easy to access, galvanized steel inner bucket with handles. The opening is 12" in diameter, making it easy to dispose of bulky trash on-the-go. The round profile is space-efficient and versatile. The brushed stainless steel body is fingerprint-proof, smudge-resistant, and easy to clean.

FEATURES

- ✓ EXTRA-LARGE CAPACITY IS PERFECT FOR BUSY LOCATIONS
- ✓ WIDE OPENING FACILITATES QUICK AND CLEAN DISPOSALS
- ✓ GALVANIZED STEEL INNER BUCKET PROVIDES QUICK AND EASY EMPTYING
- ✓ STAINLESS STEEL IS FINGERPRINT-PROOF, SMUDGE-RESISTANT, AND EASY TO CLEAN

HLS COMMERCIAL®

UnoClean.com
(224) 654-6500

SPECIFICATIONS

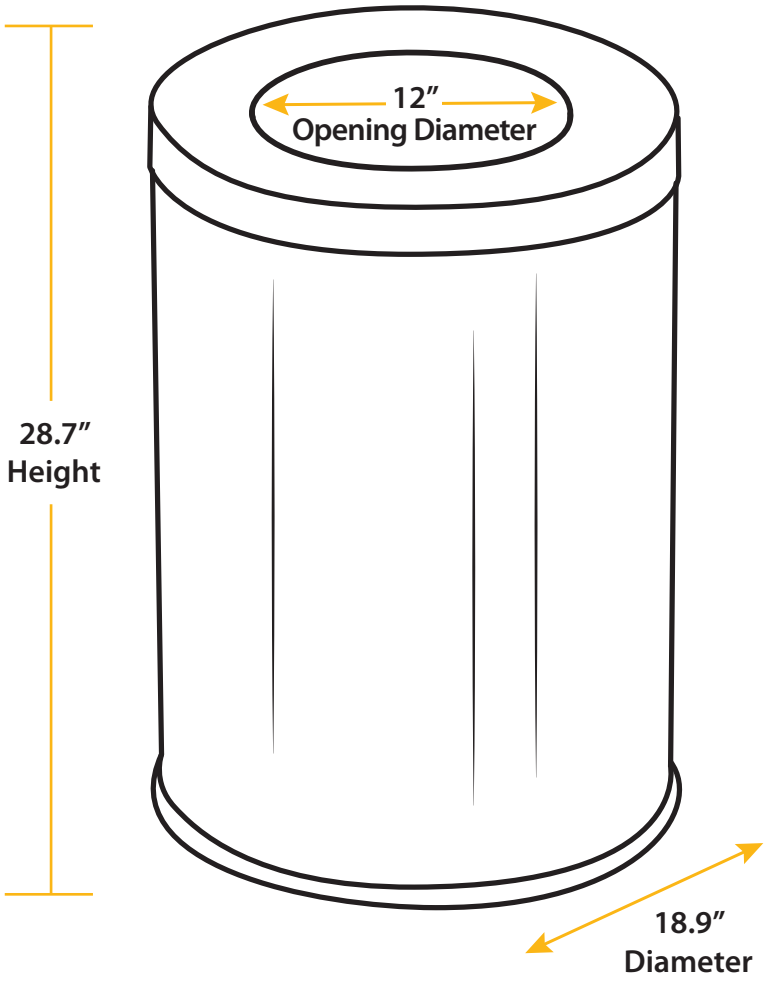

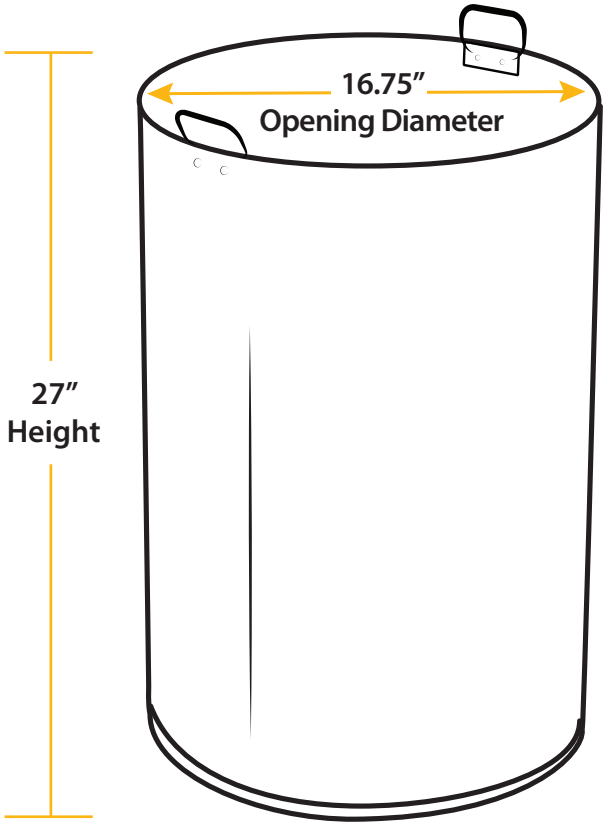

INNER BUCKET

Model: HLSC05G26

Dimensions: 18.9" L x 18.9" W x 28.7" H

Package Dimensions: 21.75" L x 21.75" W x 31" H

Product Weight: 24 lbs.

Package Weight: 26.2 lbs.

Capacity: 26 Gallons (98 Liters)

Material: Stainless Steel

UnoClean.com
(224) 654-6500