0198 - Circuit Diagram
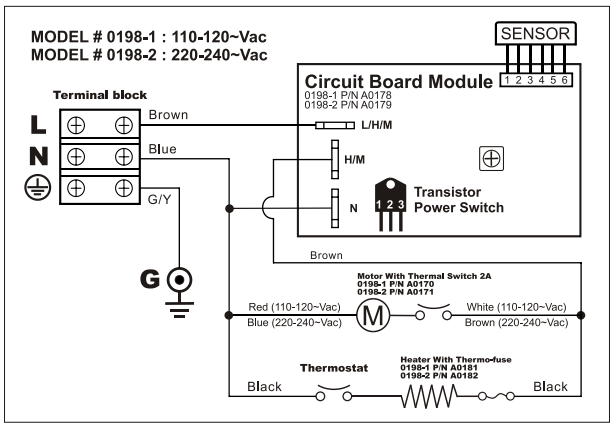
80 x 55 mm