AMERICAN SPECIALTIES, INC.
441 Saw Mill River Road, Yonkers, NY 10701 (914) 476-9000

Circuit diagram label---- 0165/0185/0195
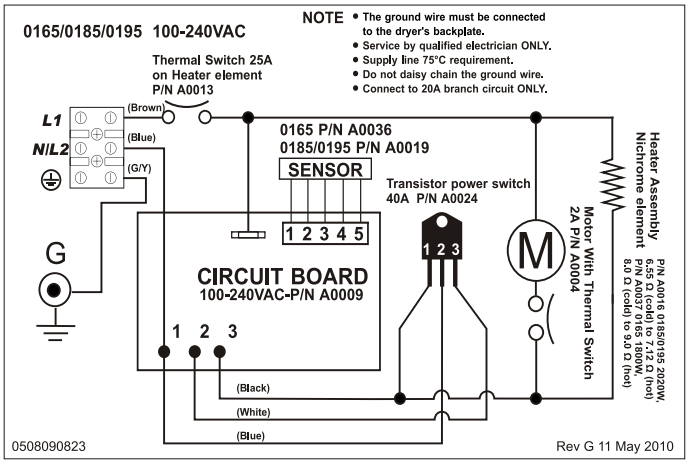
3-9/16" (90 mm) x 2-3/8" (60 mm)